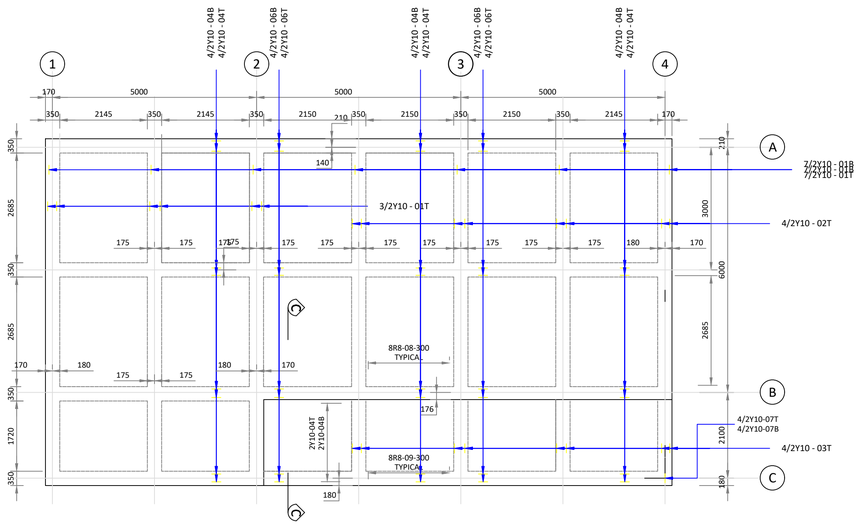

Raft Foundation Reinforcement
Scale 1:75

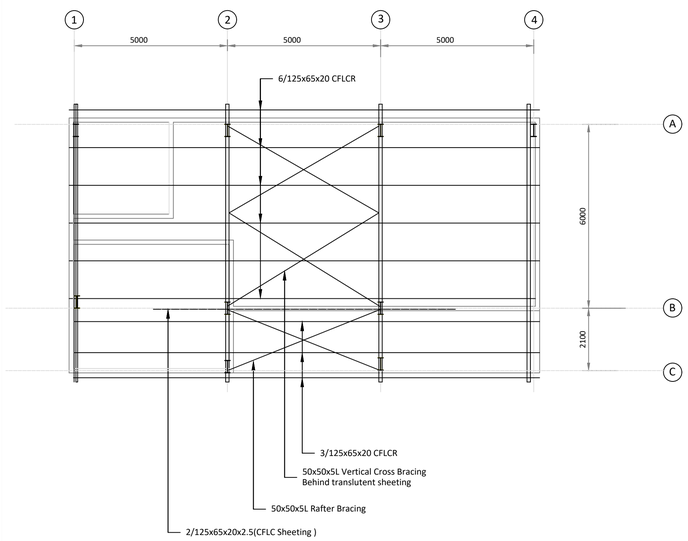

ROOF PLAN
Scale 1:100

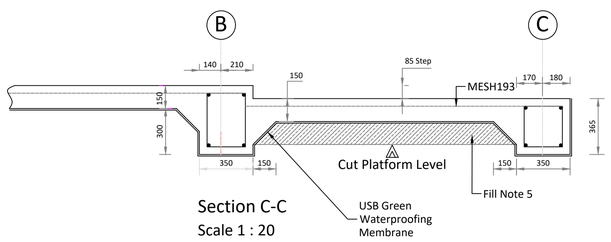

Section C-C
Scale 1 : 20

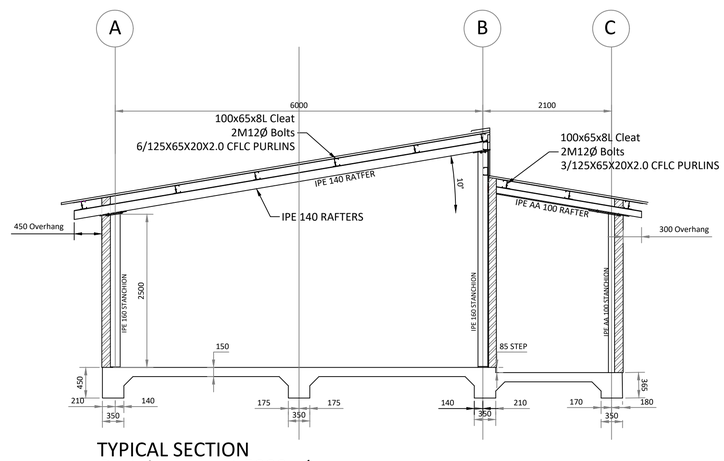

TYPICAL SECTION
Portal Frame At 5000 c/c
Scale 1:50

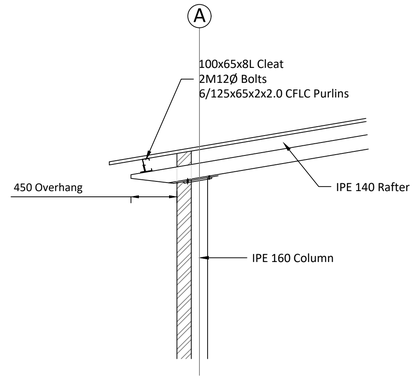

Detail A
Scale 1:30

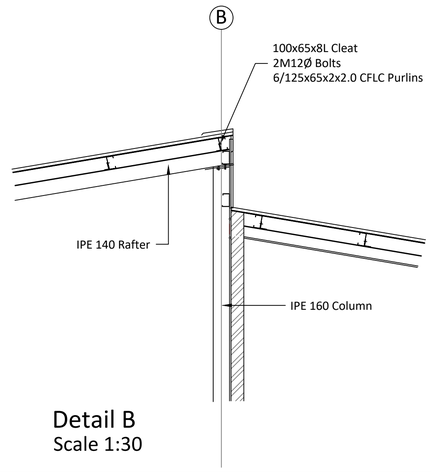

Detail B
Scale 1:30

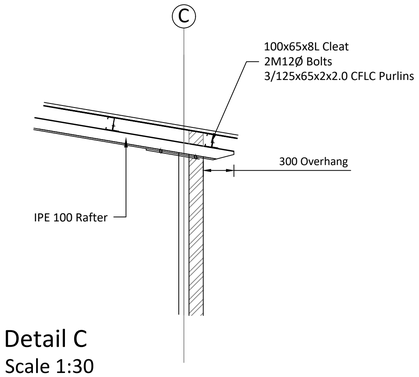

Detail C
Scale 1:30

Copyright is Vested in Hemingway & Associates cc in Terms of the Copyright Act (act 98 of 1978) and No Use or Reproduction or Duplication of the Whole or Parts Thereof May Occur Digital or otherwise Without the Written Consent of the Author

Notes

FOUNDATIONS

1.Foundation and Slab to Engineers Specification in Line with individual Geotechnical Conditions.

WALLS

2.M140, 3.5 MPa Concrete Blocks
3. External Wall Finish to be Rendered and Painted
4. Internal Wall finish to be Plastered and Painted
5. Internal Wall to be Bonded to External Wall by means of 30 x 1.2mm Galvanized Hoop Iron Straps with Both Ends Bent Down into Hallow Block Filled Solid with 15MPa Concrete where the Hoop Iron Straps are Installed.
6.Brick-force Reinforcement to be 2.8mm Galvanized Placed Every Second Course.
7. 1 Steel Ring Beam
8.Precast Conrete Lintol to be Provided over Door Opening in Internal Wall.

WINDOW
9. Standard Clisco Steel Window Frame Type as Shown on the Elevation,Painted with one coat Primer and One Coat Egloss Enamel. The core of hallow units immediately adjacent to opening to be Reinforced with 1Y10 Vertical Bar extending from floor level to the top of lintel and filled solidly with 25Mpa
10. Glazing 3mm Clear Eglass
11. Reveal Around Window 150mm Plaster Band

DOOR
12. Standard Pressed Metal Door Frame painted with One Coat Primer and One Coat Gloss Enamel.
13. The Steel Door Frame to be Set in Position Securely Braced and lugs built into block Work and turned down into hallow block . The core of hallow units immediately adjacent to opening to be Reinforced with 1Y10 Vertical Bar extending from floor level to the top of lintel and filled solidly with 25Mpa .Hollow of steel door frame to be filled solid with 25MPa concrete as the build proceeds.
14. Internal door to be Masonite with 2 Lever SABS Lock Set and External Door to be solid Pine Sealed with 3 Lever SABS Lock Set.

ROOF

15. 22.5°Roof Pitch Concrete Tiles on 38 x 38 Batterns (c/c to suit) on Membrane, on Gang-nailed trusses SA Pine Grade 5.Wall Plates 38 x x76mm with Standard Ridge Capping.All Fixing in Accordance with Manufactures Specifications
16. Trusses Tied Down with 2 Stands of 4.0mm Diameter galvanized steel wire wrapped around bottom reinforcement bar in bond block steel beam.
17. All Exposed Timber to be Treated with Approved Preservate

CEILING

18. 6.4mm Rhinoboard flush plastered with 75mm Cove Cornice.
19. Insulation : 130mm thick material fiberglass blanket Insulation.
20. Trap door standard 600 x 600 installed in passage between bedrooms.

LANDSCAPE

21. An Area Extending to 1500mm Beyond the Perimeter of the Dwelling to be Cleared of all Refuse and Vegetation Including Trees and shrubs.The Ground to slope Away from the Dwelling at a Gradient of 300mm in 1500mm and Any Loose or Disturbed Ground to be Compacted to a Minimum of 93%Mod AASHTO.

GENERAL

21. All Work to comply with NHBRC Requirements.

Reference Drawing

Ref Number	Description

Revision Details	By / Chk	Rev Date	Suffix

Client
LIMA

Ladysmith
XXXXXXXXXXXX
Kwazulu-Natal
Tel.: (XXX) XXX-XXXX
P.O.Box XX
XXXX
Fax : (XXX) XXX-XXXX

Approved On Behalf Of Client
By:
Signature:

HEMINGWAY AND ASSOCIATES cc
Consulting Engineers

Fuschia Grove Farm
D183 Mount West
P.O. Box 91 Mooi River 3300
Kwa-Zulu Natal
South Africa

Email: Rob.Archer@bundunet.com
Cell: +27 (83) 460-9356

Approved On Behalf Of Hemingway And Associates
By: (Pr. No.)
Signature:
Date:

Project
TYPE B
2 Class Room

Title
Raft Foundation Reinforcement, Section and Roof Plan

Scale		
As Shown		
Drawn: N.G.K.	Designer: R.M.A.	
Check: M.S.H.	Tech Check: M.S.H.	Date: 06-Dec-18
Project Number: 17018	Drawing Number: SB201	Revision